SPECIFICATION APPLIED

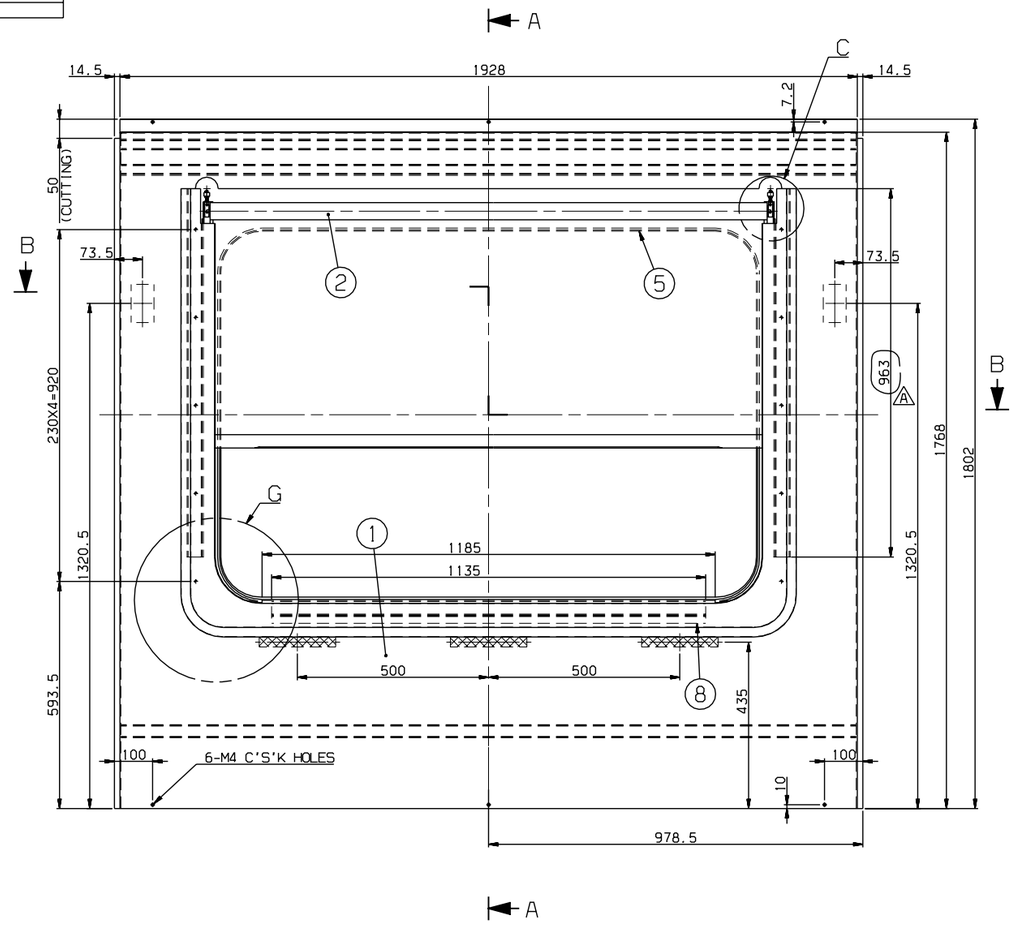

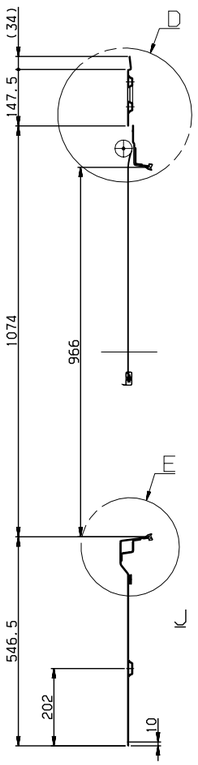

SECTION A-A

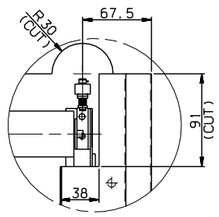

DETAIL C
SCALE=1/3

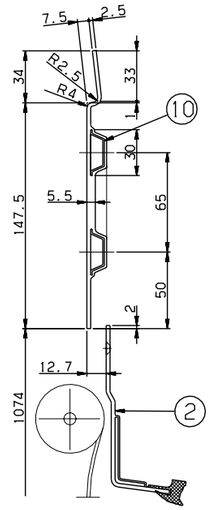

DETAIL D
SCALE=1/2

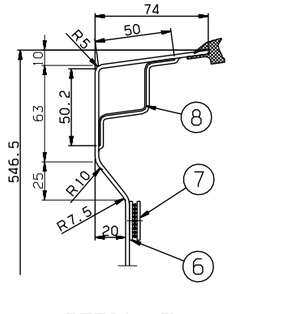

DETAIL E
SCALE=1/2

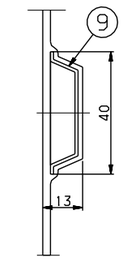

DETAIL J
SCALE=1/1

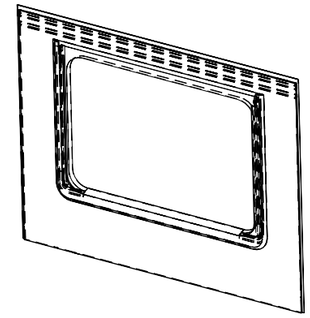

ISO VIEW

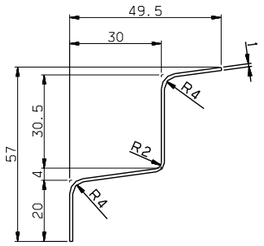

DETAIL #8
SCALE=1/1

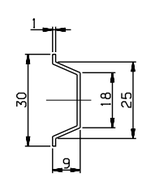

DETAIL #10
SCALE=1/1

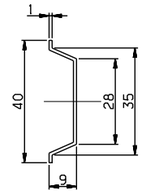

DETAIL #9
SCALE=1/1

NOTE

1. AN INTERIOR PANEL'S COLOR(RAL 7047) AND SURFACE SHALL BE MANUFACTURED AFTER SAMPLE'S APPROVAL BY CUSTOMER
2. PART 5 SHALL BE CUT ADEQUATELY AND USED
3. PART 2 SHALL BE WELL OPERATED UNDER CONDITION OF ASSEMBLY
4. PART 6 SHALL BE FIXED ON THE PART 1, AND PART 7 SHALL BE DELIVERED SEPERATETLY
5. THE INTERFACE BETWEEN PART 1 AND PART 2 SHALL BE STRONGLY SEALED
6. PART 4 SHOULD BE APPLIED WITH PART 12.

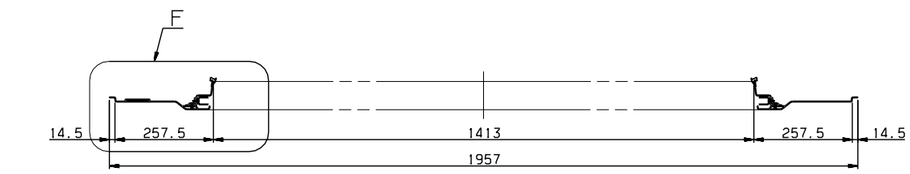

SECTION B-B

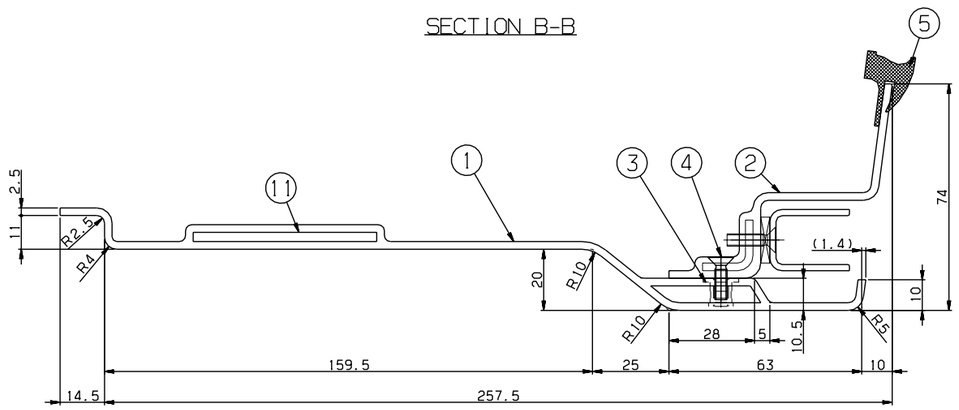

DETAIL F
SCALE=1/1

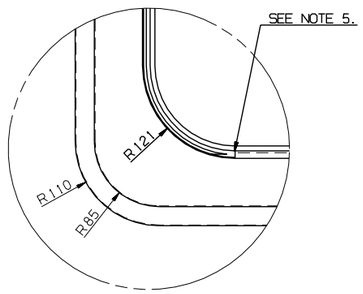

DETAIL G
SCALE=1/4

품번 NO.	부품번호 PART NO.	품명 DESCRIPTION	재질 MATERIAL	수량 Q'TY	승인 V.T	비고 REMARKS
⚠A 12	CP910004-406	ADHESIVE	ASSY	1		LOCTITE 242
11	RFP51138EJ0-011	SEAT,TAP	SUS304	2		PL T3x60x100
10	RFP51138EJ0-010	STIFFENER	A1050P	2		T1
9	RFP51138EJ0-009	STIFFENER	A1050P	1		T1
8	RFP51138EJ0-008	STIFFENER	SUS304	1		T1,L=1135
7	RFP51138EJ0-007	DUAL_LOCK,FASTENER	ASSY	3		3M,SJ-3550 L=200(DUAL TAPE)
6	RFP51138EJ0-006	DUAL_LOCK,FASTENER	ASSY	3		3M,SJ-3551 L=200(DUAL TAPE)
5	RFP51138EJ0-005	RUBBER,SECTION	ASSY	1		RFP51011AN0,L=4600
4	RS60607-098S	SCREW,F.H	SUS304	10		M4x14
3	RFP51138EJ0-003	NUTSERT	SUS304	10		M4
2	RFP51009AN0	PANEL,BLIND WINDOW	ASSY	1		
1	RFP51138EJ0-001	PANEL	FRP	1		T2.5

승인 APP	JeongYul Lee 2014.10.16	재질 MAT'L	ASSY	명 칭 TITLE	WINDOW,MASK,TYPE KK
검도 CHK	KeongBong Park 2014.10.16	중량 G.W			
설계 DGN	HeonUk Lee 2014.10.16	일본금지 도면 번호 DRG. NO	MS	RFP51138EJ0	Ver. 00 / Rev. -A
제도 DRG	HeeSook Jeong 2014.10.16	MC / VO / CT: B / B / B	SCALE 1/8	▦ SHEET 1 of 1	RSD1402 / RFP-
		SIZE A1			건-PRJT

HYUNDAI Rotem 현대로템주식회사

기호 MARK	일 자 DATE	변 경 내 용 DETAIL OF REVISION(E.C ZONE)	설변번호 E.C NO.	설계 DGN	검도 CHK	승인 APP
Ax3	2014.12.18	ADDED PART NO.#12 & DIMENSION	RSD1402-U071	H.U.LEE	K.B.PARK	J.Y.LEE

본 도면은 당사 재산권에 해당하며 무단복사/배포 금지됨. PROPERTY OF ISSUING ENTITY, CANNOT BE DISTRIBUTED OR REPRODUCED WITHOUT AUTHORIZATION.

CATIA